** 42" WIDE UP TO 8,000 CFM
52" WIDE 8,000 CFM & ABOVE

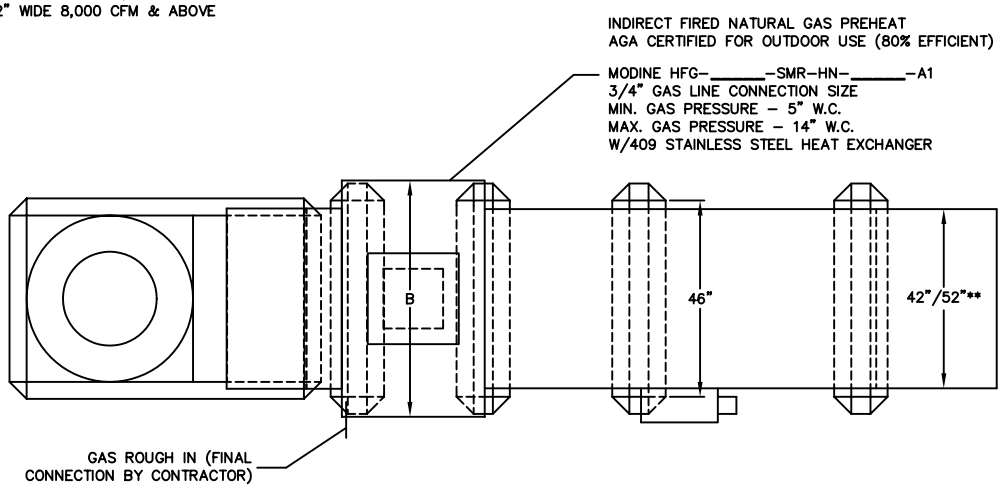

PLAN VIEW

FURNACE SIZE	A	B
75	36 1/8"	32"
100-125	36 1/8"	34 1/2"
150-175	36 1/8"	38 3/4"
200-225	40 1/8"	40 7/8"
250-300	40 1/8"	43 7/8"
350-400	40 1/8"	55 3/8"

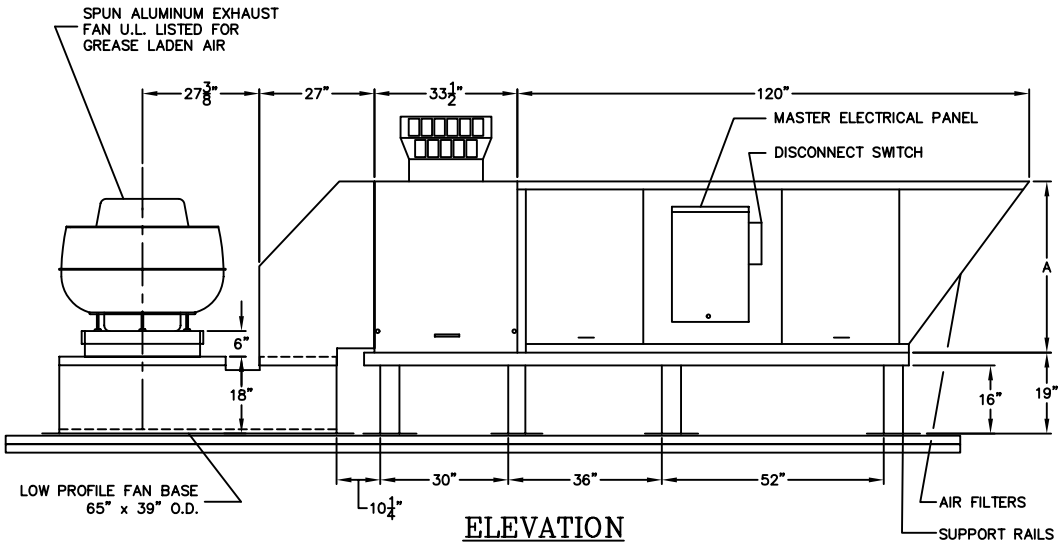

ELEVATION

MODEL CAA-IND-LPFB

TEMPERED

SPECIFICATIONS

CONSTRUCTION - ALL 18 GA. GALVANIZED STEEL WEATHERPROOF CABINET. OPTIONAL EXTERIOR FINISHED WITH AN INDUSTRIAL ENAMEL OVER A PRIMER BASE.

BLOWER - HEAVY GAUGE DWDI FORWARD CURVED BLOWER WITH A 3/4" OR 1" GROUND SHAFT, FIXED PULLEY AND SEALED BALL BEARINGS. OPTIONAL HEAVY DUTY BLOWER WITH PILLOW BLOCK BEARINGS IS AVAILABLE.

MOTOR - ODP CONTINUOUS DUTY MOTOR WITH DOUBLE-SHIELDED BALL BEARINGS AND ADJUSTABLE PULLY. ALL THREE PHASE MOTORS MEET OR EXCEED THE EPACT 92 STANDARDS. TEFC MOTORS AND NEMA PREMIUM EFFICIENCY MOTORS ARE AVAILABLE.

AIR FILTERS - 1" PERMANENT AND WASHABLE ALUMINUM MESH TYPE FILTERS.

PROJECT

DATE | REFERENCE #

LOCATION

REPRESENTATIVE

CONTRACTOR

ITEM	MODEL	FAN			MOTOR			OPTIONS
		CFM	T.S.P.	RPM	HP	VOLT	PH	

Duo-Aire

316 W. CENTRAL AVE.
SUITE 505
WINTER HAVEN, FL. 33880
(863) 294-2272
(863) 294-2704 FAX

** 42" WIDE UP TO 8,000 CFM
52" WIDE 8,000 CFM & ABOVE

INDIRECT FIRED NATURAL GAS PREHEAT
AGA CERTIFIED FOR OUTDOOR USE (80% EFFICIENT)

MODINE HFG-_____-SMR-HN-_____-A1
3/4" GAS LINE CONNECTION SIZE
MIN. GAS PRESSURE – 5" W.C.
MAX. GAS PRESSURE – 14" W.C.
W/409 STAINLESS STEEL HEAT EXCHANGER

FURNACE SIZE	A	B
450	$40\frac{1}{8}$"	$40\frac{7}{8}$"
500–600	$40\frac{1}{8}$"	$43\frac{7}{8}$"
700–800	$40\frac{1}{8}$"	$55\frac{3}{8}$"

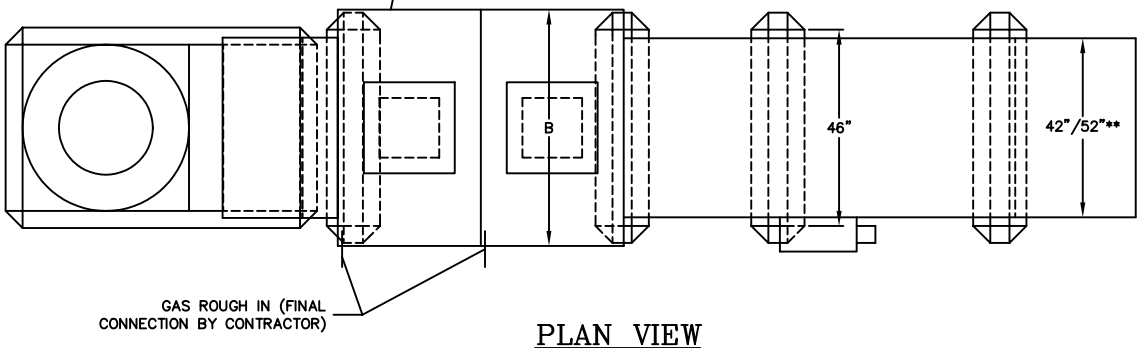

PLAN VIEW

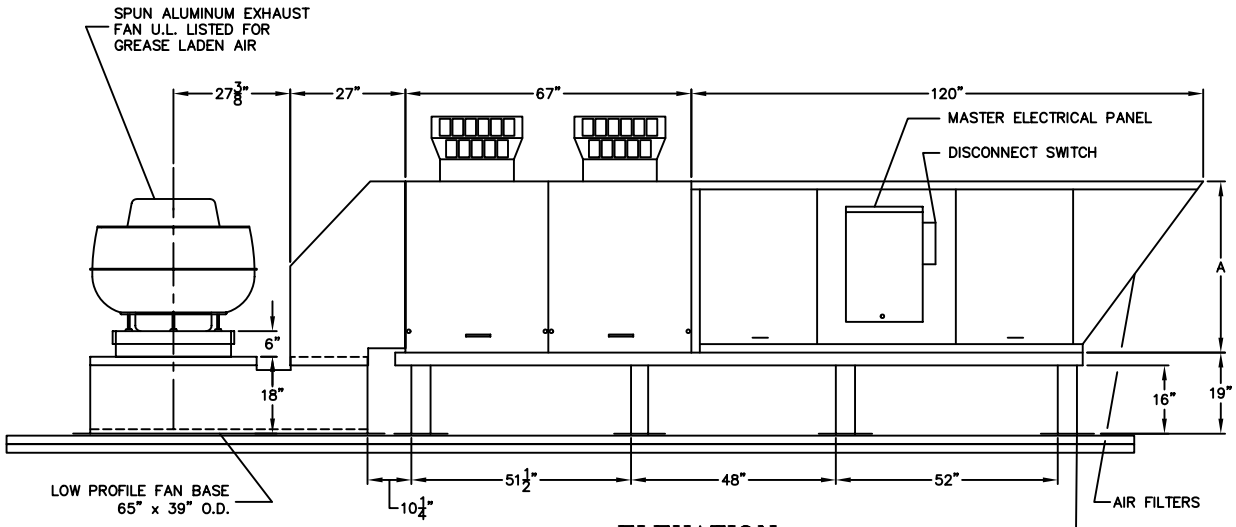

ELEVATION

MODEL CAA-IND-LPFB

TEMPERED

SPECIFICATIONS

CONSTRUCTION – ALL 18 GA. GALVANIZED STEEL WEATHERPROOF CABINET. OPTIONAL EXTERIOR FINISHED WITH AN INDUSTRIAL ENAMEL OVER A PRIMER BASE.

BLOWER – HEAVY GAUGE DWDI FORWARD CURVED BLOWER WITH A $\frac{3}{4}$" OR 1" GROUND SHAFT, FIXED PULLEY AND SEALED BALL BEARINGS. OPTIONAL HEAVY DUTY BLOWER WITH PILLOW BLOCK BEARINGS IS AVAILABLE.

MOTOR – ODP CONTINUOUS DUTY MOTOR WITH DOUBLE-SHIELDED BALL BEARINGS AND ADJUSTABLE PULLY. ALL THREE PHASE MOTORS MEET OR EXCEED THE EPACT 92 STANDARDS. TEFC MOTORS AND NEMA PREMIUM EFFICIENCY MOTORS ARE AVAILABLE.

AIR FILTERS – 1" PERMANENT AND WASHABLE ALUMINUM MESH TYPE FILTERS.

PROJECT

DATE

REFERENCE #

LOCATION

REPRESENTATIVE

CONTRACTOR

ITEM	MODEL	FAN			MOTOR			OPTIONS
		CFM	T.S.P.	RPM	HP	VOLT	PH	

Duo-Aire

316 W. CENTRAL AVE.
SUITE 505
WINTER HAVEN, FL. 33880
(863) 294-2272
(863) 294-2704 FAX

* DISCONNECTS 200 AMP AND LARGER ARE SHIPPED LOOSE

** 40" WIDE UP TO 8,000 CFM
52" WIDE 8,000 CFM & ABOVE

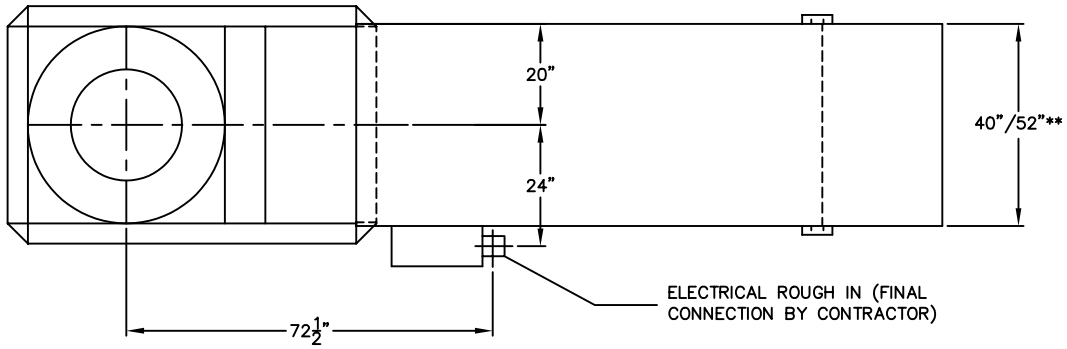

PLAN VIEW

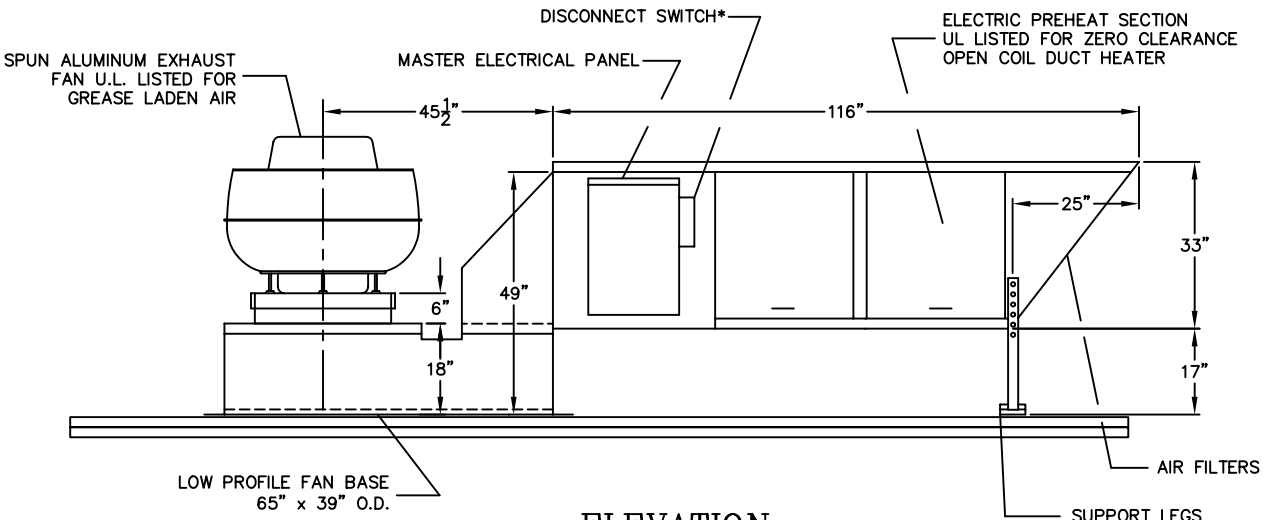

ELEVATION

ITEM	MODEL	FAN			MOTOR			OPTIONS
		CFM	T.S.P.	RPM	HP	VOLT	PH	

MODEL CAA-EPH-LPFB

TEMPERED

SPECIFICATIONS

CONSTRUCTION – ALL 18 GA. GALVANIZED STEEL WEATHERPROOF CABINET. OPTIONAL EXTERIOR FINISHED WITH AN INDUSTRIAL ENAMEL OVER A PRIMER BASE.

BLOWER – HEAVY GAUGE DWDI FORWARD CURVED BLOWER WITH A ¾" OR 1" GROUND SHAFT, FIXED PULLEY AND SEALED BALL BEARINGS. OPTIONAL HEAVY DUTY BLOWER WITH PILLOW BLOCK BEARINGS IS AVAILABLE.

MOTOR – ODP CONTINUOUS DUTY MOTOR WITH DOUBLE-SHIELDED BALL BEARINGS AND ADJUSTABLE PULLY. ALL THREE PHASE MOTORS MEET OR EXCEED THE EPACT 92 STANDARDS. TEFC MOTORS AND NEMA PREMIUM EFFICIENCY MOTORS ARE AVAILABLE.

AIR FILTERS – 1" PERMANENT AND WASHABLE ALUMINUM MESH TYPE FILTERS.

PROJECT

DATE | REFERENCE #

LOCATION

REPRESENTATIVE

CONTRACTOR

Duo-Aire

316 W. CENTRAL AVE.
SUITE 505
WINTER HAVEN, FL. 33880
(863) 294-2272
(863) 294-2704 FAX

** 40" WIDE UP TO 8,000 CFM
52" WIDE 8,000 CFM & ABOVE

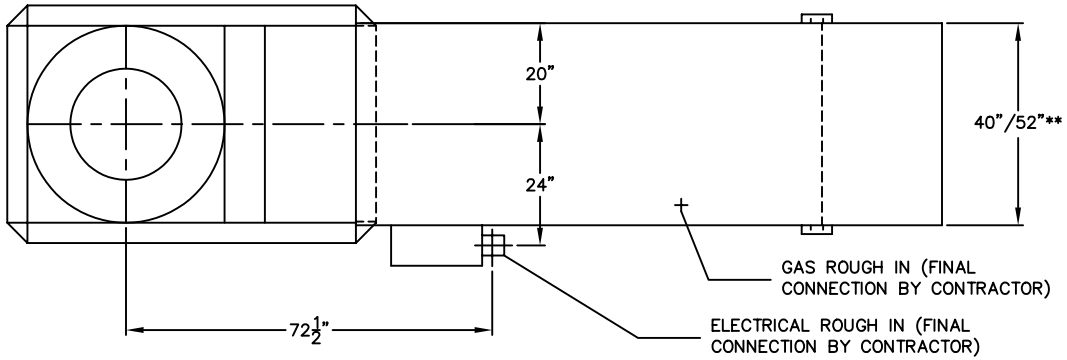

PLAN VIEW

LISTED

REPORT #527941

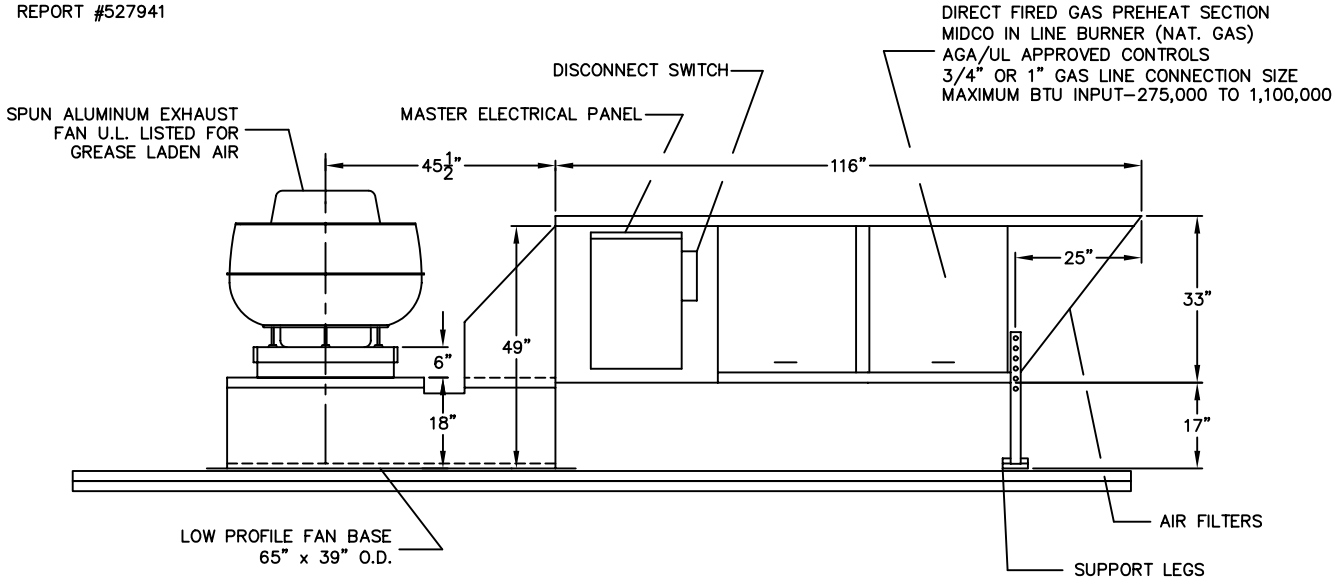

ELEVATION

MODEL CAA-D-LPFB

TEMPERED

SPECIFICATIONS

CONSTRUCTION – ALL 18 GA. GALVANIZED STEEL WEATHERPROOF CABINET. OPTIONAL EXTERIOR FINISHED WITH AN INDUSTRIAL ENAMEL OVER A PRIMER BASE.

BLOWER – HEAVY GAUGE DWDI FORWARD CURVED BLOWER WITH A ¾" OR 1" GROUND SHAFT, FIXED PULLEY AND SEALED BALL BEARINGS. OPTIONAL HEAVY DUTY BLOWER WITH PILLOW BLOCK BEARINGS IS AVAILABLE.

MOTOR – ODP CONTINUOUS DUTY MOTOR WITH DOUBLE-SHIELDED BALL BEARINGS AND ADJUSTABLE PULLY. ALL THREE PHASE MOTORS MEET OR EXCEED THE EPACT 92 STANDARDS. TEFC MOTORS AND NEMA PREMIUM EFFICIENCY MOTORS ARE AVAILABLE.

AIR FILTERS – 1" PERMANENT AND WASHABLE ALUMINUM MESH TYPE FILTERS.

PROJECT

DATE | REFERENCE #

LOCATION

REPRESENTATIVE

CONTRACTOR

ITEM	MODEL	FAN			MOTOR			OPTIONS
		CFM	T.S.P.	RPM	HP	VOLT	PH	

Duo-Aire

316 W. CENTRAL AVE.
SUITE 505
WINTER HAVEN, FL. 33880
(863) 294-2272
(863) 294-2704 FAX

** 40" WIDE UP TO 8,000 CFM
52" WIDE 8,000 CFM & ABOVE

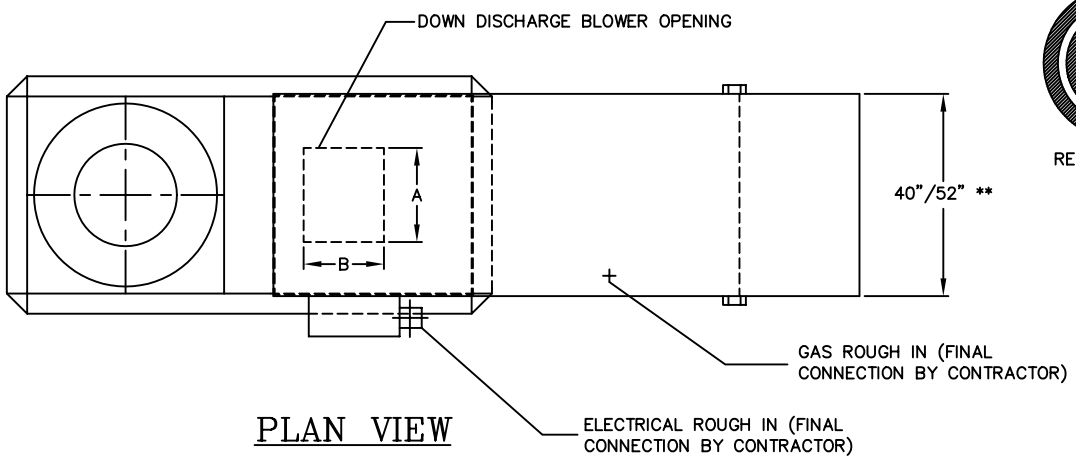

PLAN VIEW

LISTED

REPORT #527941

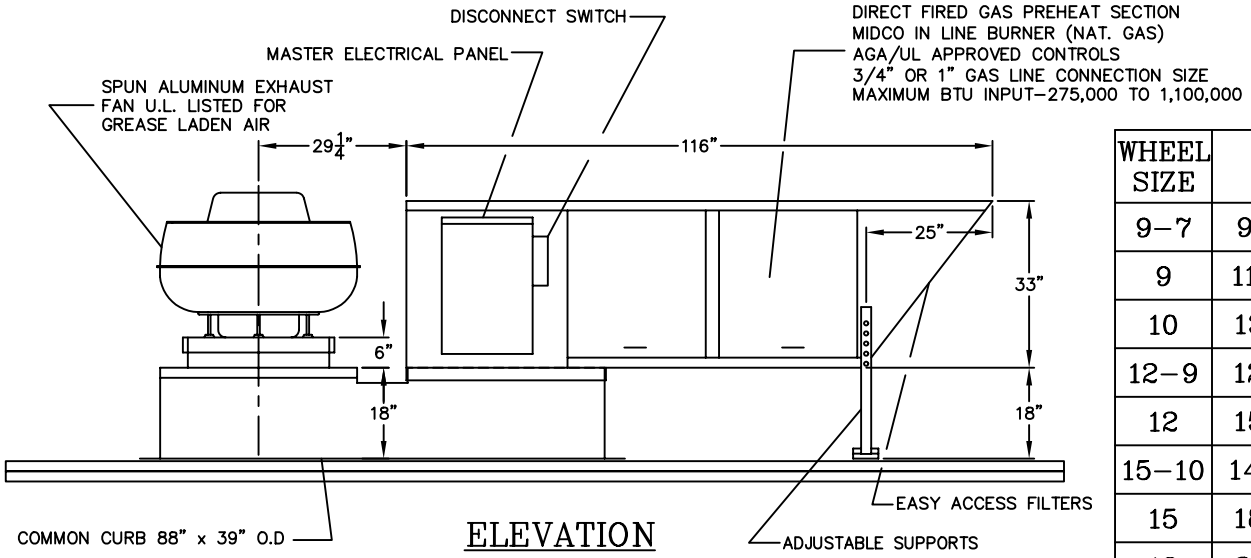

ELEVATION

WHEEL SIZE	A	B
9–7	9 3/16"	10 1/4"
9	11 13/16"	10 1/4"
10	13 1/8"	11 3/8"
12–9	12 1/4"	13 7/16"
12	15 5/8"	13 7/16"
15–10	14 11/16"	15 7/8"
15	18 5/8"	15 7/8"
18	21 7/8"	18 7/8"

MODEL CAA–D–CC

TEMPERED

SPECIFICATIONS

CONSTRUCTION – ALL 18 GA. GALVANIZED STEEL WEATHERPROOF CABINET. OPTIONAL EXTERIOR FINISHED WITH AN INDUSTRIAL ENAMEL OVER A PRIMER BASE.

BLOWER – HEAVY GAUGE DWDI FORWARD CURVED BLOWER WITH A 3/4" OR 1" GROUND SHAFT, FIXED PULLEY AND SEALED BALL BEARINGS. OPTIONAL HEAVY DUTY BLOWER WITH PILLOW BLOCK BEARINGS IS AVAILABLE.

MOTOR – ODP CONTINUOUS DUTY MOTOR WITH DOUBLE–SHIELDED BALL BEARINGS AND ADJUSTABLE PULLY. ALL THREE PHASE MOTORS MEET OR EXCEED THE EPACT 92 STANDARDS. TEFC MOTORS AND NEMA PREMIUM EFFICIENCY MOTORS ARE AVAILABLE.

AIR FILTERS – 1" PERMANENT AND WASHABLE ALUMINUM MESH TYPE FILTERS.

PROJECT

DATE | REFERENCE #

LOCATION

REPRESENTATIVE

CONTRACTOR

ITEM	MODEL	FAN			MOTOR			OPTIONS
		CFM	T.S.P.	RPM	HP	VOLT	PH	

Duo-Aire

316 W. CENTRAL AVE.
SUITE 505
WINTER HAVEN, FL. 33880
(863) 294–2272
(863) 294–2704 FAX